AUTOMATION FOR BARRIERS WITH 6 m BOOMS

710/EL613

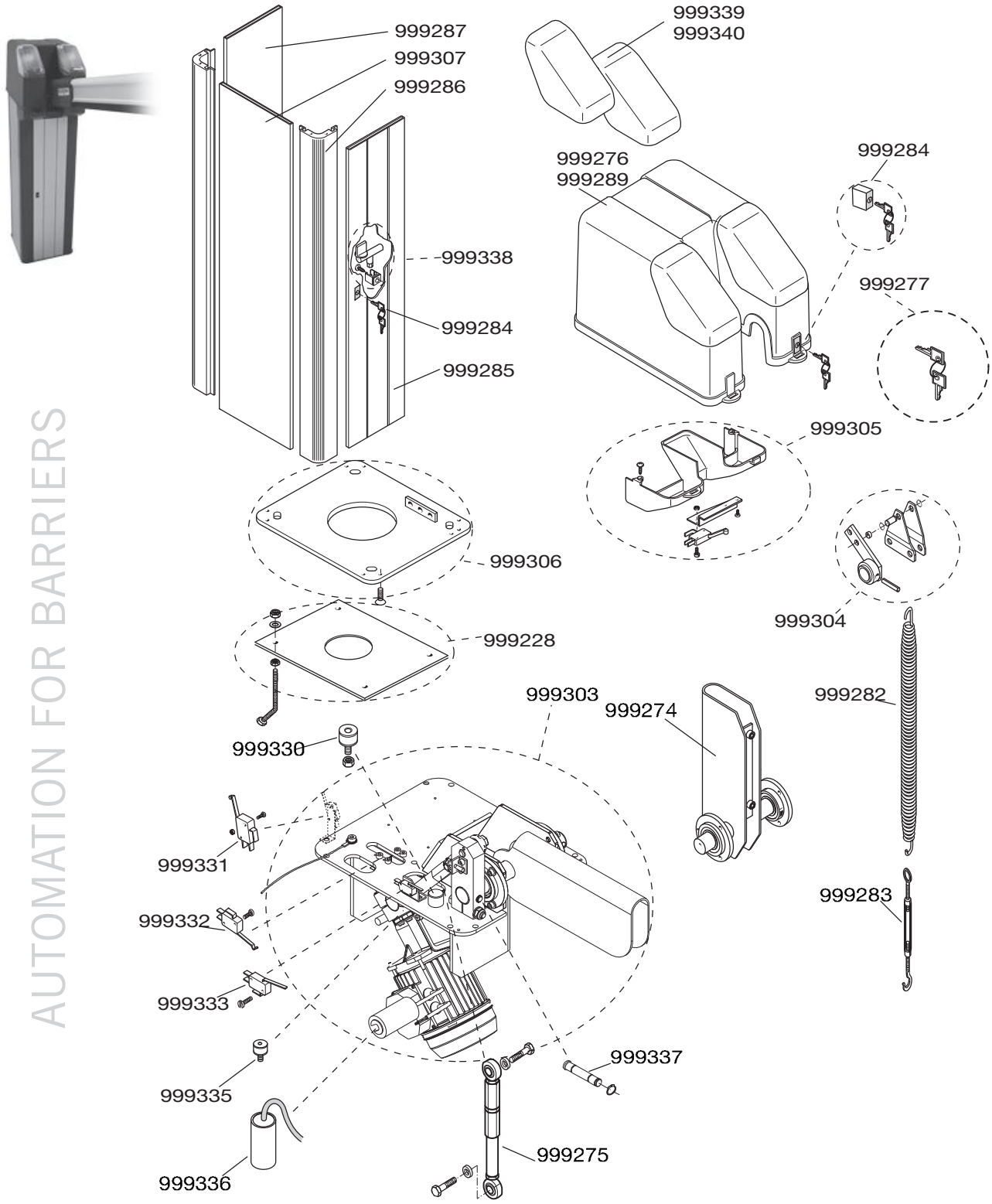

AUTOMATION FOR BARRIERS WITH 6 m BOOMS
710/EL613

PART NR.	PCS	DESCRIPTION	
999228	1	Foundation base plate kit	
999274	1	Boom holder assembly	
999275	1	Adjustable tie rod	
999276	1	Hood without warning lights	
999277	1	Hood/front panel keys	
999282	1	Spring	
999283	1	Tightener	
999284	1	Lock kit	
999285	1	Front panel + 999284	
999286	1	Corner profile	
999287	1	Rear panel	
999289	1	Hood + warning lights	
999303	1	Complete transmission unit	
999304	1	Spring accessories	
999305	1	Spoiler assembly	
999306	1	Barrier base plate	
999307	1	Side panel	
999330	3	Rubber boom cushion	
999331	1	Micro-switch 16A fast	
999332	1	Micro-switch 16A fast	
999333	1	Micro-switch 16A fast	
999335	3	Rubber lever cushion	
999336	1	Capacitor 20μF-450V	
999337	5	Safety pin	
999338	1	Manual release mechanism	
999339	2	Yellow transparent cover (PC)	
999340	2	Red blind cover (ABS)	